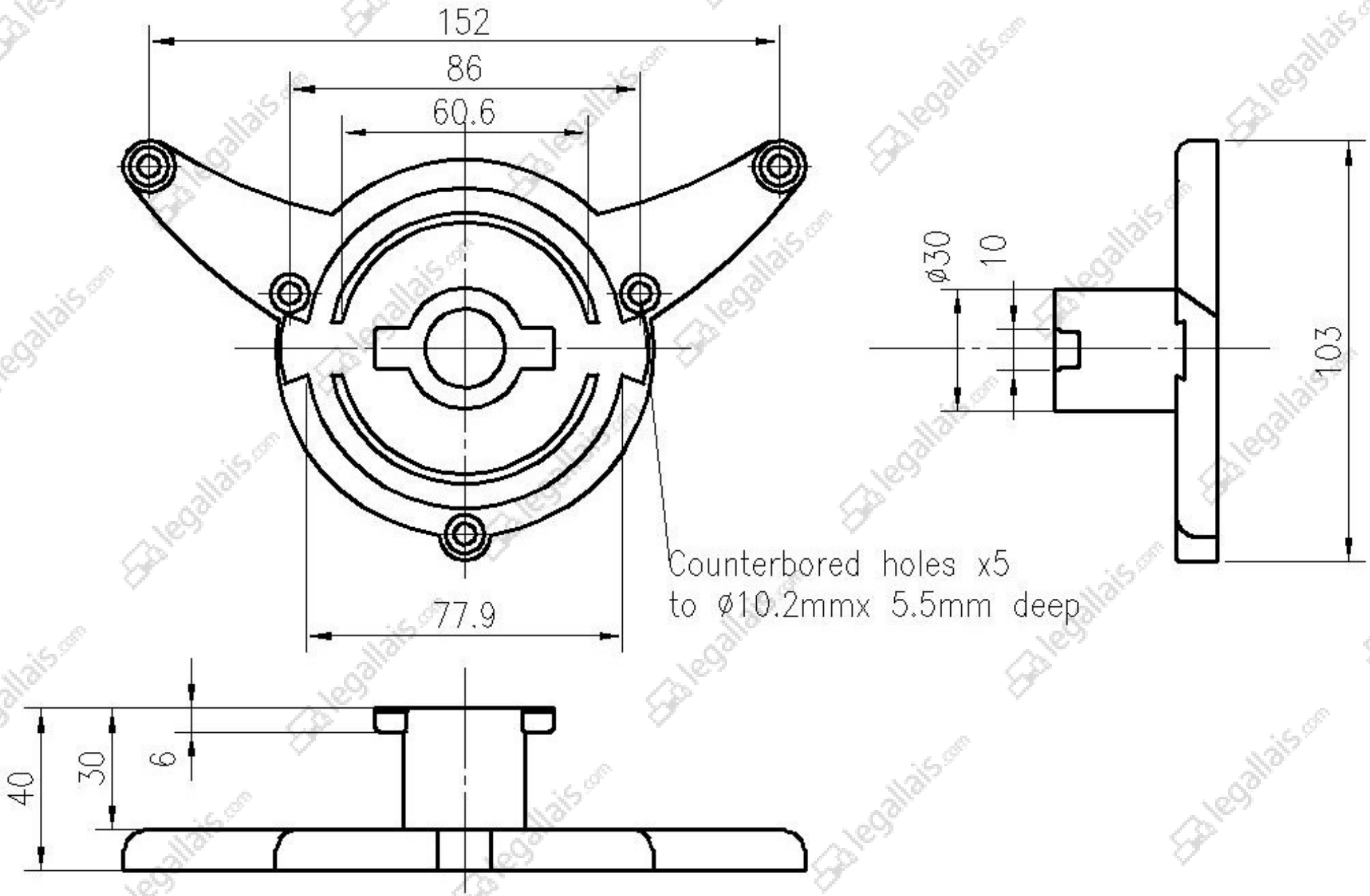
152
86
60.6
77.9
Counterbored holes x5
to ø10.2mmx 5.5mm deep
ø30
10
103
40
30
6